# 产品规格
Product Specification

## 1.1 碳钢、不锈钢、混合型 / 英 制 （两端为管箍连接）
Carbon Steel , Stainless Steel , Combi / Inches (straight fitting)

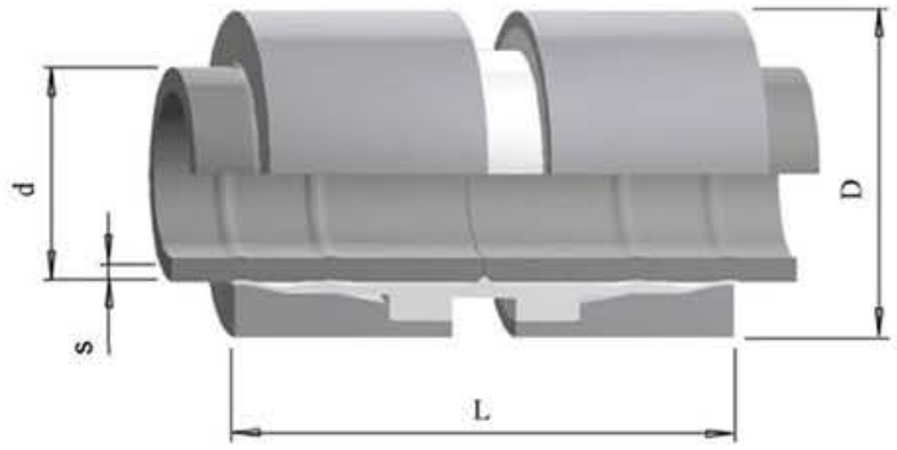


注意：如果管道的壁厚小于表格所列的壁厚 s = min，则需加用加固内垫，并独立预定制造。

Remark : Pipes having wall thickness less than s=min. , need a stiffening sleeve.This must be ordered separately.

| d = pipeΦ | s=min DIN | s=min ANSI | L | D | kg |
|---|---|---|---|---|---|
| 13.5-1/4'' | 1.8 | | 51.5 | 24 | 0.11 |
| 13.7-1/4'' | | 2.2 | 51.5 | 24 | 0.11 |
| 17.2-3/8'' | 1.8 | | 51.5 | 28 | 0.14 |
| 17.1-3/8'' | | 2.3 | 51.5 | 28 | 0.14 |
| 21.3-1/2'' | 2.0 | | 51.5 | 33 | 0.18 |
| 21.3-1/2'' | | 2.8 | 51.5 | 33 | 0.18 |
| 26.9-3/4'' | 2.3 | | 51.5 | 41 | 0.26 |
| 26.7-3/4'' | | 2.9 | 51.5 | 41 | 0.26 |
| 33.7-1'' | 2.6 | | 87 | 52 | 0.80 |
| 33.4-1'' | | 3.4 | 87 | 52 | 0.80 |
| 42.4-1 1/4'' | 2.6 | | 87 | 61 | 0.93 |
| 42.2-1 1/4'' | | 3.6 | 87 | 61 | 0.93 |
| 48.3-1 1/2'' | 2.6 | | 87 | 68 | 1.10 |
| 48.3-1 1/2'' | | 3.7 | 87 | 68 | 1.10 |
| 60.3-2'' | 2.9 | | 89 | 81 | 1.40 |
| 60.3-2'' | | 3.9 | 89 | 81 | 1.40 |
| 76.1-2 1/2'' | 3.65 | | 102 | 100 | 2.40 |
| 73.0-2 1/2'' | | 5.2 | 102 | 100 | 2.35 |
| 88.9-3'' | 4.85 | | 102 | 114 | 2.80 |
| 88.9-3'' | | 5.5 | 102 | 114 | 2.80 |
| 114.3-4'' | 6.02 | | 102 | 142 | 3.90 |
| 114.3-4'' | | 6.0 | 102 | 142 | 3.90 |
| 139.7-5'' | 7.1 | | 127 | 174 | 7.60 |
| 141.3-5'' | | 6.6 | 127 | 174 | 7.60 |
| 168.3-6'' | 8.0 | | 127 | 210 | 11.20 |
| 168.3-6'' | | 7.1 | 127 | 210 | 11.20 |

## 1.3 不锈钢 / 英 制 、公 制 (2个出口)

Stainless Steel / Inches , Millimeters (with 2 outlets)

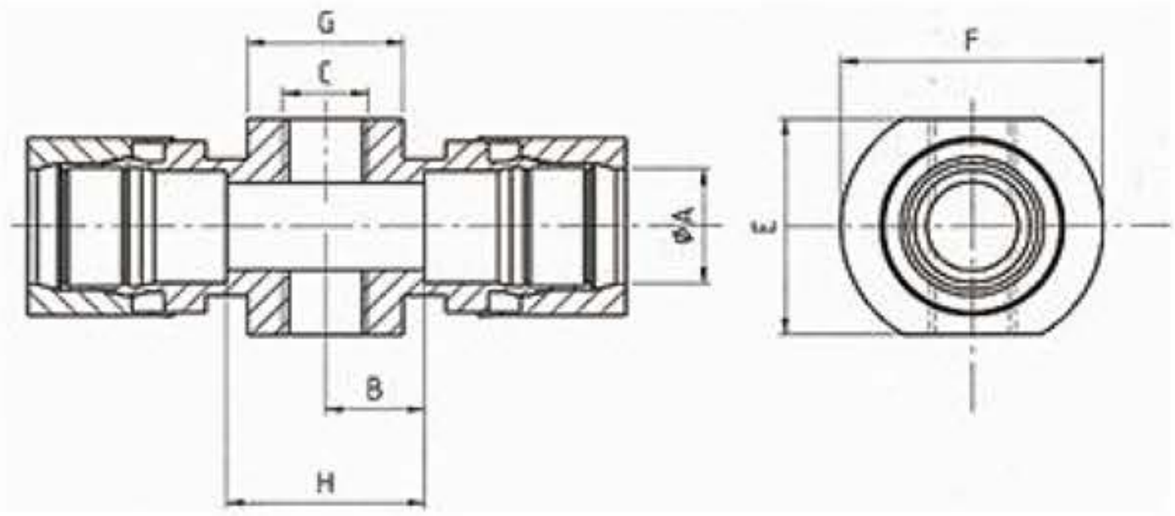


| 规格 ( Spec.) | ØA | B | C | E | F | G | H | kg |
|---|---|---|---|---|---|---|---|---|
| 17. 2 (3/8'' ) /2x1/4'' | 17. 2 | 19. 25 | G 1/4" | 37 | 35 | 32 | 38. 5 | 0. 3 |
| 17. 14 (3/8'' ) /2x1/4'' | 17. 14 | 19. 25 | G 1/4" | 37 | 35 | 32 | 38. 5 | 0. 3 |
| | | | | | | | | |
| 21. 3 (1/2'' ) /2x3/8'' | 21. 3 | 21. 25 | G 3/8" | 44 | 40 | 36 | 42. 5 | |
| 21. 34 (1/2'' ) /2x3/8'' | 21. 34 | 21. 25 | G 3/8" | 44 | 40 | 36 | 42. 5 | |
| | | | | | | | | |
| 26. 9 (3/4'' ) /2x3/8'' | 26. 9 | 21. 25 | G 3/8" | 49 | 45 | 36 | 42. 5 | 0. 8 |
| 26. 67 (3/4'' ) /2x3/8'' | 26. 67 | 21. 25 | G 3/8" | 49 | 45 | 36 | 42. 5 | 0. 8 |
| | | | | | | | | |
| 33. 7 (1'' ) /2x3/8'' | 33. 7 | 22. 5 | G 3/8" | 58 | 52 | 36 | 45 | 1. 0 |
| 33. 4 (1'' ) /2x3/8'' | 33. 4 | 22. 5 | G 3/8" | 58 | 52 | 36 | 45 | 1. 0 |
| | | | | | | | | |
| 42. 4 (1 1/2'' ) /2x3/8'' | 42. 4 | 22. 5 | G 3/8" | 66 | 61 | 36 | 45 | |
| 42. 16 (1 1/2'' ) /2x3/8'' | 42. 16 | 22. 5 | G 3/8" | 66 | 61 | 36 | 45 | |
| | | | | | | | | |
| 60. 3 (2'' ) /2x3/8'' | 60. 3 | 25. 5 | G 3/8" | 85 | 81 | 40 | 51 | |

| 规格 ( Spec.) | ØA | B | C | E | F | G | H | kg |
|---|---|---|---|---|---|---|---|---|
| | | | | | | | | |
| 18/2x1/4'' | 18 | 19. 25 | G 1/4" | 37 | 35 | 32 | 38. 5 | 0. 3 |
| | | | | | | | | |
| 22/2x1/4'' | 22 | 21. 25 | G 3/8" | 44 | 40 | 36 | 42. 5 | |
| | | | | | | | | |
| 28/2x3/8'' | 28 | 21. 25 | G 3/8" | 49 | 45 | 36 | 42. 5 | 0. 8 |
| | | | | | | | | |
| 38/2x3/8'' | 38 | 22. 5 | G 3/8" | 58 | 55 | 36 | 45 | 1. 0 |
| | | | | | | | | |

## 不锈钢 / 英 制 、公 制 (4个出口)

Stainless Steel / Inches , Millimeters (with 4 outlets)

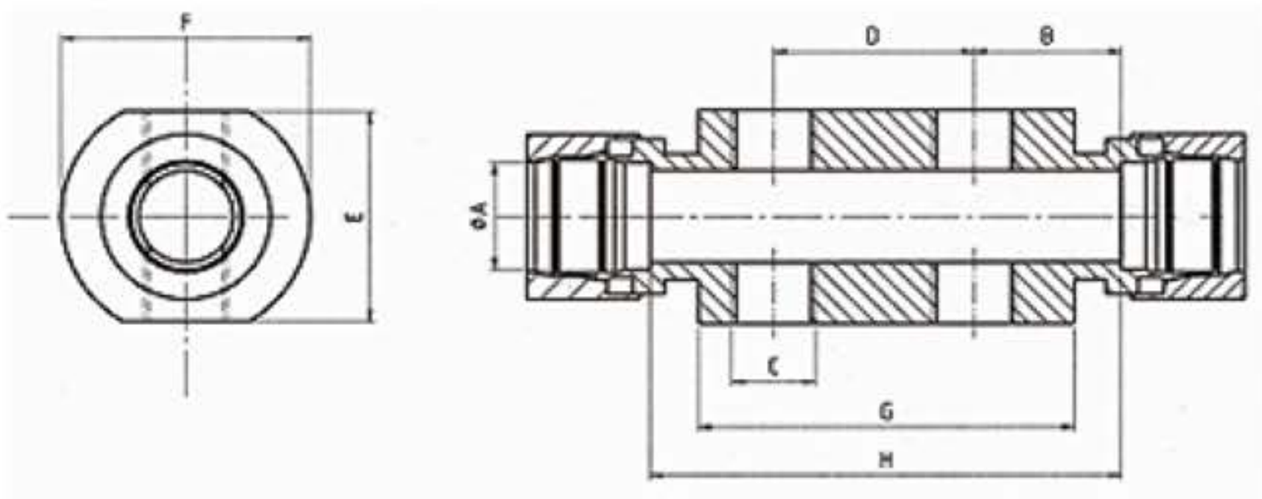


| 规格 ( Spec.) | ØA | B | C | D | E | F | G | H | kg |
|---|---|---|---|---|---|---|---|---|---|
| 17.2 (3/8'' ) /4x1/4'' | 17.2 | 19.25 | G 1/4" | 40 | 37 | 35 | 72 | 78.5 | 0.7 |
| 17.14 (3/8'' ) /4x1/4'' | 17.14 | 19.25 | G 1/4" | 40 | 37 | 35 | 72 | 78.5 | 0.7 |
| | | | | | | | | | |
| 21.3 (1/2'' ) /4x3/8'' | 21.3 | 21.25 | G 3/8" | 40 | 44 | 40 | 76 | 82.5 | |
| 21.34 (1/2'' ) /4x3/8'' | 21.34 | 21.25 | G 3/8" | 40 | 44 | 40 | 76 | 82.5 | |
| | | | | | | | | | |
| 26.9 (3/4'' ) /4x3/8'' | 26.9 | 21.25 | G 3/8" | 40 | 49 | 45 | 76 | 82.5 | 1.1 |
| 26.67 (3/4'' ) /4x3/8'' | 26.67 | 21.25 | G 3/8" | 40 | 49 | 45 | 76 | 82.5 | 1.1 |
| | | | | | | | | | |
| 33.7 (1'' ) /4x3/8'' | 33.7 | 22.5 | G 3/8" | 40 | 58 | 52 | 76 | 85 | 1.7 |
| 33.4 (1'' ) /4x3/8'' | 33.4 | 22.5 | G 3/8" | 40 | 58 | 52 | 76 | 85 | 1.7 |
| | | | | | | | | | |
| 42.4 (1 1/2'' ) /4x3/8'' | 42.4 | 22.5 | G 3/8" | 40 | 66 | 61 | 76 | 85 | |
| 42.16 (1 1/2'' ) /4x3/8'' | 42.16 | 22.5 | G 3/8" | 40 | 66 | 61 | 76 | 85 | |
| | | | | | | | | | |
| 60.3 (2'' ) /4x3/8'' | 60.30 | 25.5 | G 3/8" | 40 | 85 | 81 | 80 | 91 | |

| 规格 ( Spec.) | ØA | B | C | D | E | F | G | H | kg |
|---|---|---|---|---|---|---|---|---|---|
| | | | | | | | | | |
| 18/4x1/4'' | 18 | 19.25 | G 1/4" | 40 | 37 | 35 | 72 | 78.5 | 0.7 |
| | | | | | | | | | |
| 22/4x1/4'' | 22 | 21.25 | G 3/8" | 40 | 44 | 40 | 76 | 82.5 | |
| | | | | | | | | | |
| 28/4x3/8'' | 28 | 21.25 | G 3/8" | 40 | 49 | 45 | 76 | 82.5 | 1.1 |
| | | | | | | | | | |
| 38/4x3/8'' | 38 | 22.5 | G 3/8" | 40 | 58 | 55 | 76 | 85 | 1.7 |

## 不锈钢 / 英 制 、公 制 (6个出口)

Stainless Steel / Inches , Millimeters (with 6 outlets)

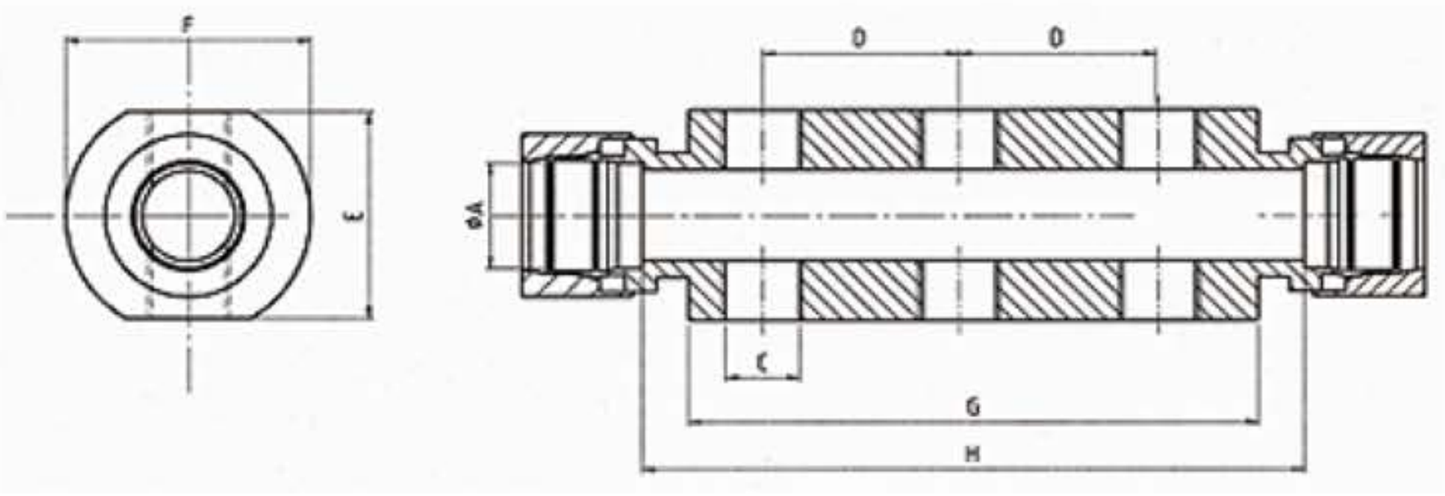


| 规格 ( Spec.) | ØA | B | C | D | E | F | G | H | kg |
|---|---|---|---|---|---|---|---|---|---|
| 17.2 (3/8'' ) /6x1/4'' | 17.2 | 19.25 | G 1/4" | 40 | 37 | 35 | 112 | 118.5 | 1.1 |
| 17.14 (3/8'' ) /6x1/4'' | 17.14 | 19.25 | G 1/4" | 40 | 37 | 35 | 112 | 118.5 | 1.1 |
| | | | | | | | | | |
| 21.3 (1/2'' ) /6x3/8'' | 21.3 | 21.25 | G 3/8" | 40 | 44 | 40 | 116 | 122.5 | |
| 21.34 (1/2'' ) /6x3/8'' | 21.34 | 21.25 | G 3/8" | 40 | 44 | 40 | 116 | 122.5 | |
| | | | | | | | | | |
| 26.9 (3/4'' ) /6x3/8'' | 26.9 | 21.25 | G 3/8" | 40 | 49 | 45 | 116 | 122.5 | 1.6 |
| 26.67 (3/4'' ) /6x3/8'' | 26.67 | 21.25 | G 3/8" | 40 | 49 | 45 | 116 | 122.5 | 1.6 |
| | | | | | | | | | |
| 33.7 (1'' ) /6x3/8'' | 33.7 | 22.5 | G 3/8" | 40 | 58 | 52 | 116 | 125 | 2.4 |
| 33.4 (1'' ) /6x3/8'' | 33.40 | 22.5 | G 3/8" | 40 | 58 | 52 | 116 | 125 | 2.4 |
| | | | | | | | | | |
| 42.4 (1 1/2'' ) /6x3/8'' | 42.4 | 22.5 | G 3/8" | 40 | 66 | 61 | 116 | 125 | |
| 42.16 (1 1/2'' ) /6x3/8'' | 42.16 | 22.5 | G 3/8" | 40 | 66 | 61 | 116 | 125 | |
| | | | | | | | | | |
| 60.3 (2'' ) /6x3/8'' | 60.3 | 25.5 | G 3/8" | 40 | 85 | 81 | 120 | 131 | |

| 规格 ( Spec.) | ØA | B | C | D | E | F | G | H | kg |
|---|---|---|---|---|---|---|---|---|---|
| | | | | | | | | | |
| 18/4x1/4'' | 18 | 19.25 | G 1/4" | 40 | 37 | 35 | 112 | 118.5 | 1.1 |
| | | | | | | | | | |
| 22/4x1/4'' | 22 | 21.25 | G 3/8" | 40 | 44 | 40 | 116 | 122.5 | |
| | | | | | | | | | |
| 28/4x3/8'' | 28 | 21.25 | G 3/8" | 40 | 49 | 45 | 116 | 122.5 | 1.6 |
| | | | | | | | | | |
| 38/4x3/8'' | 38 | 22.5 | G 3/8" | 40 | 58 | 55 | 116 | 125 | 2.4 |

碳钢、不锈钢、混合型 / 英 制 （一端为管箍连接，另一端为外螺纹连接）

Carbon Steel , Stainless Steel , Combi / Inches (fitting with external thread)

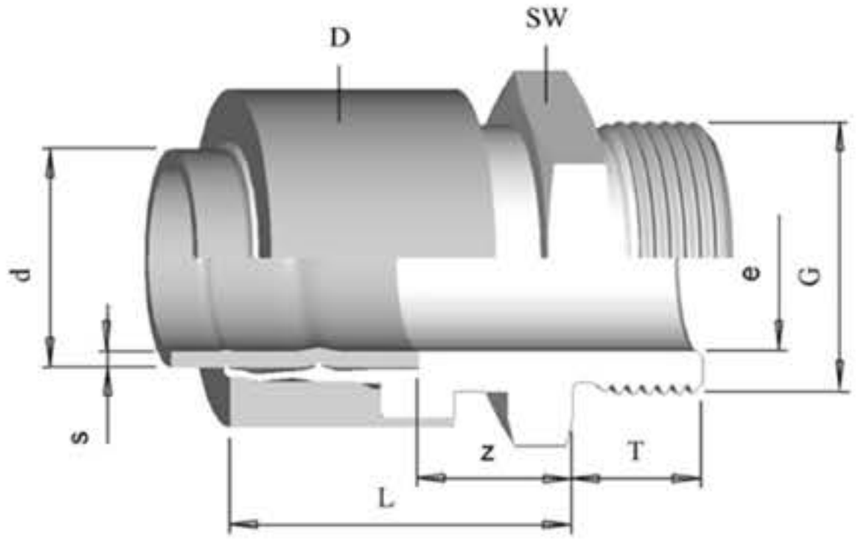


注意：如果管道的壁厚小于表格所列的壁厚 s = min，则需加用加固内垫，并独立预定制造。

Remark : Pipes having wall thickness less than s=min. , need a stiffening sleeve.This must be ordered separately.

| d = pipeΦ | G | s=min DIN | s=min ANSI | T | SW | L | D | kg |
|---|---|---|---|---|---|---|---|---|
| 13.5-1/4'' | G1/4'' | 1.8 | | 11 | 22 | 36 | 24 | 0.08 |
| 13.7-1/4'' | G1/4'' | | 2.2 | 11 | 22 | 36 | 24 | 0.08 |
| 17.2-3/8'' | G3/8'' | 1.8 | | 12 | 27 | 37 | 28 | 0.14 |
| 17.1-3/8'' | G3/8'' | | 2.3 | 12 | 27 | 37 | 28 | 0.14 |
| 21.3-1/2'' | G1/2'' | 2.0 | | 16 | 32 | 38 | 33 | 0.18 |
| 21.3-1/2'' | G1/2'' | | 2.8 | 16 | 32 | 38 | 33 | 0.18 |
| 26.9-3/4'' | G3/4'' | 2.3 | | 17 | 36 | 39 | 41 | 0.26 |
| 26.7-3/4'' | G3/4'' | | 2.9 | 17 | 36 | 39 | 41 | 0.26 |
| 33.7-1'' | G1'' | 2.6 | | 19 | 50 | 59 | 52 | 0.80 |
| 33.4-1'' | G1'' | | 3.4 | 19 | 50 | 59 | 52 | 0.80 |
| 42.4-1 1/4'' | G1 1/4'' | 2.6 | | 22 | 53 | 59 | 61 | 0.93 |
| 42.2-1 1/4'' | G1 1/4'' | | 3.6 | 22 | 53 | 59 | 61 | 0.93 |
| 48.3-1 1/2'' | G1 1/2'' | 2.6 | | 22 | 60 | 60 | 68 | 1.10 |
| 48.3-1 1/2'' | G1 1/2'' | | 3.7 | 22 | 60 | 60 | 68 | 1.10 |
| 60.3-2'' | G2'' | 2.9 | | 24 | 72 | 64 | 81 | 1.40 |
| 60.3-2'' | G2'' | | 3.9 | 24 | 72 | 64 | 81 | 1.40 |
| 76.1-2 1/2'' | G2 1/2'' | 3.65 | | 26 | 88 | 73 | 100 | 2.40 |
| 73.0-2 1/2'' | G2 1/2'' | | 5.2 | 26 | 88 | 73 | 100 | 2.35 |

碳钢、不锈钢、混合型 / 英 制 （一端为管箍连接，另一端为内螺纹连接）

Carbon Steel , Stainless Steel , Combi / Inches (fitting with internal thread)

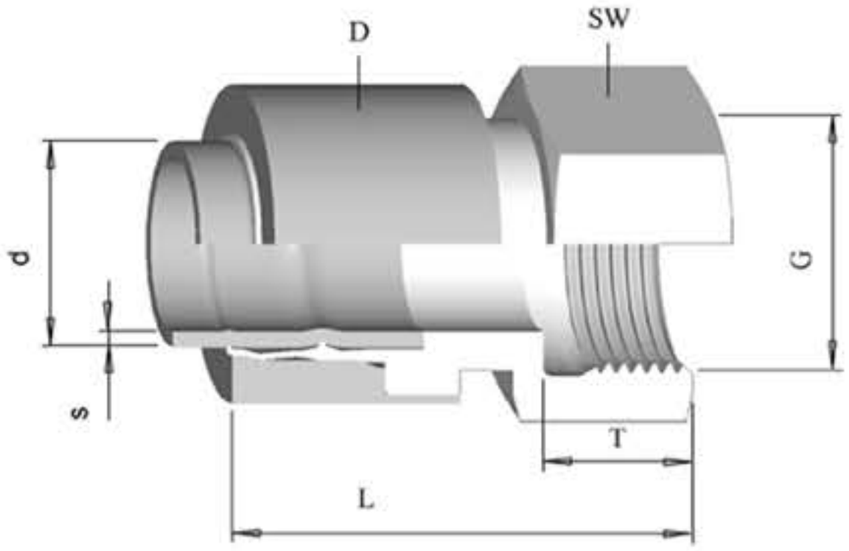


注意：如果管道的壁厚小于表格所列的壁厚 s = min，则需加用加固内垫，并独立预定制造。

Remark : Pipes having wall thickness less than s=min. , need a stiffening sleeve.This must be ordered separately.

| d = pipeΦ | G | s=min DIN | s=min ANSI | T | SW | L | D | kg |
|---|---|---|---|---|---|---|---|---|
| 13.5-1/4'' | G1/4'' | 1.8 | | 7 | 22 | 36 | 24 | 0.10 |
| 13.7-1/4'' | G1/4'' | | 2.2 | 7 | 22 | 36 | 24 | 0.10 |
| 17.2-3/8'' | G3/8'' | 1.8 | | 8 | 27 | 37 | 28 | 0.12 |
| 17.1-3/8'' | G3/8'' | | 2.3 | 8 | 27 | 37 | 28 | 0.12 |
| 21.3-1/2'' | G1/2'' | 2.0 | | 11 | 32 | 40 | 33 | 0.15 |
| 21.3-1/2'' | G1/2'' | | 2.8 | 11 | 32 | 40 | 33 | 0.15 |
| 26.9-3/4'' | G3/4'' | 2.3 | | 13 | 41 | 42 | 41 | 0.19 |
| 26.7-3/4'' | G3/4'' | | 2.9 | 13 | 41 | 42 | 41 | 0.19 |
| 33.7-1'' | G1'' | 2.6 | | 11 | 50 | 59 | 52 | 0.52 |
| 33.4-1'' | G1'' | | 3.4 | 11 | 50 | 59 | 52 | 0.52 |
| 42.4-1 1/4'' | G1 1/4'' | 2.6 | | 11 | 53 | 59 | 61 | 0.70 |
| 42.2-1 1/4'' | G1 1/4'' | | 3.6 | 11 | 53 | 59 | 61 | 0.70 |
| 48.3-1 1/2'' | G1 1/2'' | 2.6 | | 12 | 60 | 60 | 68 | 0.83 |
| 48.3-1 1/2'' | G1 1/2'' | | 3.7 | 12 | 60 | 60 | 68 | 0.83 |
| 60.3-2'' | G2'' | 2.9 | | 14 | 72 | 64 | 81 | 1.07 |
| 60.3-2'' | G2'' | | 3.9 | 14 | 72 | 64 | 81 | 1.07 |
| 76.1-2 1/2'' | G2 1/2'' | 3.65 | | 16 | 88 | 73 | 100 | 1.56 |
| 73.0-2 1/2'' | G2 1/2'' | | 5.2 | 16 | 88 | 73 | 100 | 1.56 |

## 碳钢、不锈钢、混合型 / 英 制 （T 型管接头，各端为管箍连接）
## Carbon Steel , Stainless Steel , Combi / Inches (union Tee)

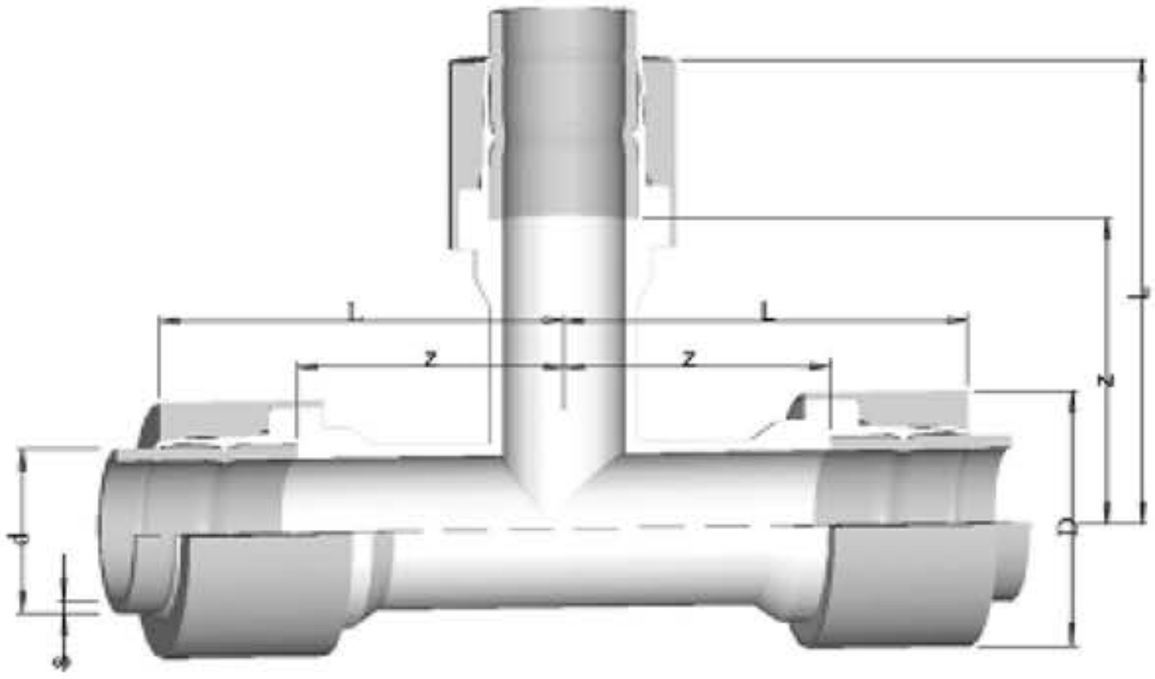


注意：如果管道的壁厚小于表格所列的壁厚 s = min，则需加用加固内垫，并独立预定制造。

Remark : Pipes having wall thickness less than s=min. , need a stiffening sleeve.This must be ordered separately.

| d = pipeΦ | s=min DIN | s=min ANSI | L | Z | D | kg |
|---|---|---|---|---|---|---|
| 17.2-3/8'' | 1.8 | | 53 | 33.75 | 28 | 0.33 |
| 17.1-3/8'' | | 2.3 | 53 | 33.75 | 28 | 0.33 |
| 21.3-1/2'' | 2.0 | | 55.5 | 36.25 | 33 | 0.39 |
| 21.3-1/2'' | | 2.8 | 55.5 | 36.25 | 33 | 0.39 |
| 26.9-3/4'' | 2.3 | | 59.5 | 40.25 | 41 | 0.75 |
| 26.7-3/4'' | | 2.9 | 59.5 | 40.25 | 41 | 0.75 |
| 33.7-1'' | 2.6 | | 89 | 56.25 | 52 | 1.59 |
| 33.4-1'' | | 3.4 | 89 | 56.25 | 52 | 1.59 |
| 42.4-1 1/4'' | 2.6 | | 93.5 | 60.75 | 61 | 2.10 |
| 42.2-1 1/4'' | | 3.6 | 93.5 | 60.75 | 61 | 2.10 |
| 48.3-1 1/2'' | 2.6 | | 97 | 64.25 | 68 | 2.57 |
| 48.3-1 1/2'' | | 3.7 | 97 | 64.25 | 68 | 2.57 |
| 60.3-2'' | 2.9 | | 110.5 | 77.75 | 81 | 3.51 |
| 60.3-2'' | | 3.9 | 110.5 | 77.75 | 81 | 3.51 |
| 76.1-2 1/2'' | 3.65 | | 127 | 89 | 100 | 5.38 |
| 73.0-2 1/2'' | | 5.2 | 127 | 89 | 100 | 5.10 |
| 88.9-3'' | 4.85 | | 139 | 101 | 114 | 6.79 |
| 88.9-3'' | | 5.5 | 139 | 101 | 114 | 6.79 |
| 114.3-4'' | 6.02 | | 153 | 115 | 142 | 10.20 |
| 114.3-4'' | | 6.0 | 153 | 115 | 142 | 10.20 |

碳钢、不锈钢、混合型 / 英 制 （90度弯头，两端为管箍连接）
Carbon Steel , Stainless Steel , Combi / Inches (quarter bend)

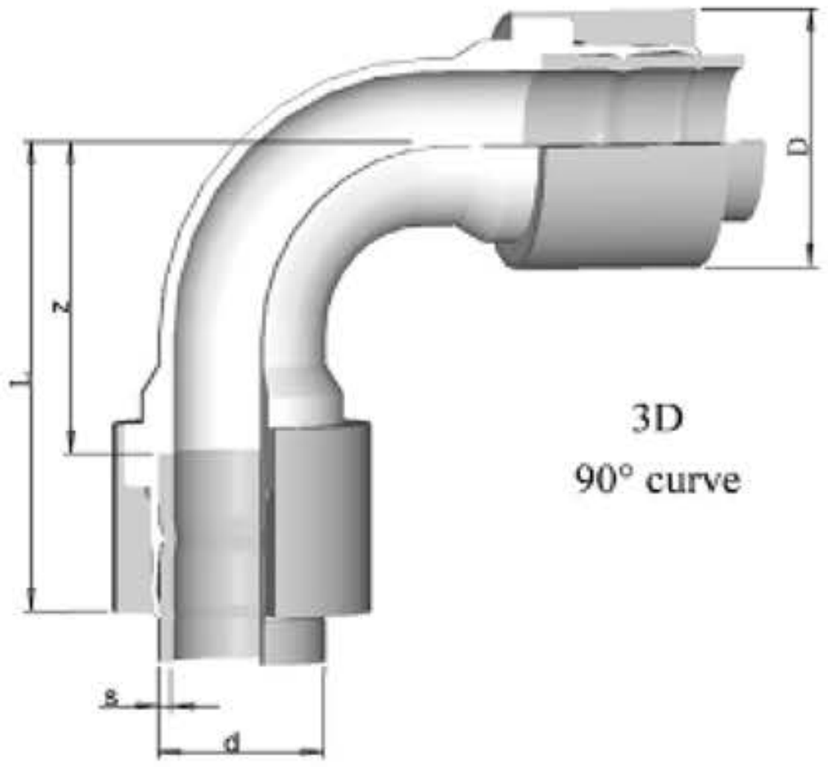


3D
90° curve

注意：如果管道的壁厚小于表格所列的壁厚 s = min，则需加用加固内垫，并独立预定制造。
Remark : Pipes having wall thickness less than s=min. , need a stiffening sleeve.This must be ordered separately.

| d = pipeΦ | s=min DIN | s=min ANSI | L | Z | D | kg |
|---|---|---|---|---|---|---|
| 17.2-3/8'' | 1.8 | | 53 | 33.75 | 28 | 0.20 |
| 17.1-3/8'' | | 2.3 | 53 | 33.75 | 28 | 0.20 |
| 21.3-1/2'' | 2.0 | | 55.5 | 36.25 | 33 | 0.24 |
| 21.3-1/2'' | | 2.8 | 55.5 | 36.25 | 33 | 0.24 |
| 26.9-3/4'' | 2.3 | | 59.5 | 40.25 | 41 | 0.33 |
| 26.7-3/4'' | | 2.9 | 59.5 | 40.25 | 41 | 0.33 |
| 33.7-1'' | 2.6 | | 89 | 56.25 | 52 | 0.99 |
| 33.4-1'' | | 3.4 | 89 | 56.25 | 52 | 0.99 |
| 42.4-1 1/4'' | 2.6 | | 93.5 | 60.75 | 61 | 1.26 |
| 42.2-1 1/4'' | | 3.6 | 93.5 | 60.75 | 61 | 1.26 |
| 48.3-1 1/2'' | 2.6 | | 97 | 64.25 | 68 | 1.52 |
| 48.3-1 1/2'' | | 3.7 | 97 | 64.25 | 68 | 1.52 |
| 60.3-2'' | 2.9 | | 110.5 | 77.75 | 81 | 2.16 |
| 60.3-2'' | | 3.9 | 110.5 | 77.75 | 81 | 2.16 |
| 76.1-2 1/2'' | 3.65 | | 127 | 89 | 100 | 3.23 |
| 73.0-2 1/2'' | | 5.2 | 127 | 89 | 100 | 3.10 |
| 88.9-3'' | 4.85 | | 139 | 101 | 114 | 4.21 |
| 88.9-3'' | | 5.5 | 139 | 101 | 114 | 4.21 |
| 114.3-4'' | 6.02 | | 153 | 115 | 142 | 6.49 |
| 114.3-4'' | | 6.0 | 153 | 115 | 142 | 6.49 |

## 1.2 碳钢、不锈钢、混合型 / 公 制 （两端为管箍连接）

Carbon Steel , Stainless Steel , Combi / Millimeters (straight fitting)

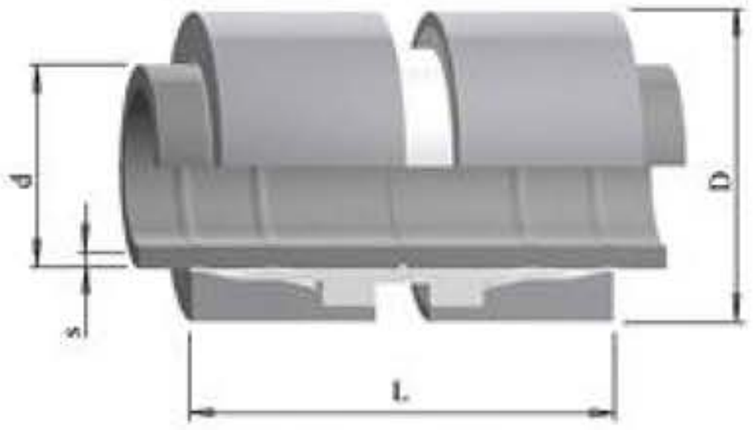


注意：如果管道的壁厚小于表格所列的壁厚 s = min，则需加用加固内垫，并独立预定制造。

Remark : Pipes having wall thickness less than s=min. , need a stiffening sleeve.This must be ordered separately.

| d = pipeΦ | s=min DIN | L | D | kg |
|---|---|---|---|---|
| 4 | 0.75 | 34.6 | 10 | 0.016 |
| 5 | 0.75 | 34.6 | 11 | 0.019 |
| 6 | 1 | 34.6 | 13 | 0.028 |
| 8 | 1 | 34.6 | 15 | 0.032 |
| 10 | 1 | 34.6 | 17 | 0.037 |
| 12 | 1.5 | 34.6 | 19 | 0.043 |
| 14 | 1.5 | 51.5 | 24 | 0.111 |
| 15 | 1.5 | 51.5 | 25 | 0.118 |
| 16 | 1.5 | 51.5 | 26 | 0.123 |
| 18 | 1.5 | 51.5 | 28 | 0.135 |
| 20 | 2 | 51.5 | 31 | 0.165 |
| 22 | 2 | 51.5 | 33 | 0.178 |
| 25 | 2.5 | 51.5 | 36 | 0.200 |
| 28 | 2.5 | 51.5 | 40 | 0.240 |
| 30 | 2.5 | 87 | 47 | 0.660 |
| 35 | 2.5 | 87 | 52 | 0.750 |
| 38 | 3 | 87 | 55 | 0.810 |
| 42 | 3 | 87 | 61 | 0.940 |
| 50 | 4 | 89 | 70 | 1.230 |
| 60 | 4 | 89 | 81 | 1.440 |
| 65 | 5 | 89 | 86 | 1.850 |
| 80 | 6 | 102 | 102 | 2.100 |

**碳钢、不锈钢、混合型 / 公 制 （一端为管箍连接，一端为外螺纹连接）**
Carbon Steel ,Stainless Steel , Combi / Millimeters (fitting with external thread)

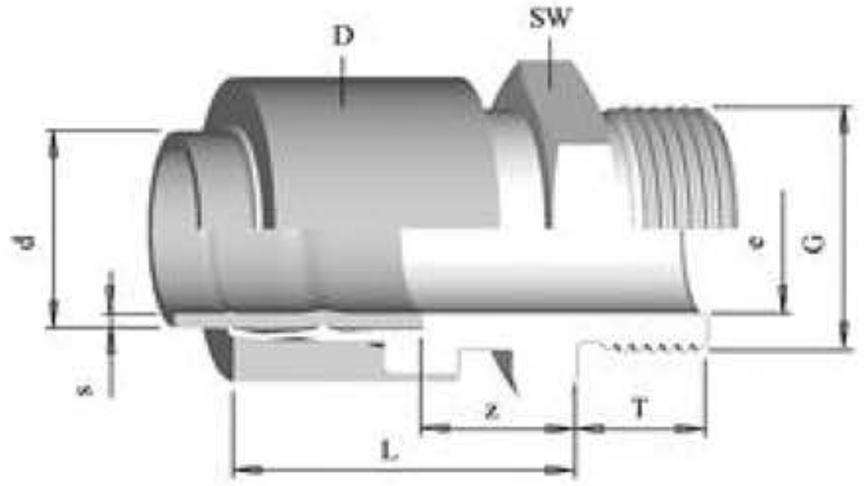


注意：如果管道的壁厚小于表格所列的壁厚 s = min，则需加用加固内垫，并独立预定制造。
Remark : Pipes having wall thickness less than s=min. , need a stiffening sleeve.This must be ordered separately.

| D=pipeΦ | G | s=min DIN | e | L | Z | T | D | SW | kg |
|---|---|---|---|---|---|---|---|---|---|
| 4 | G1/8'' | 0.75 | 3 | 25.8 | 8.5 | 9 | 10 | 14 | |
| 5 | G1/8'' | 0.75 | 3 | 25.8 | 8.5 | 9 | 11 | 14 | |
| 6 | G1/8'' | 1 | 4 | 25.8 | 8.5 | 9 | 13 | 14 | |
| 8 | G1/4'' | 1 | 6 | 25.8 | 8.5 | 11 | 15 | 17 | |
| 10 | G1/4'' | 1 | 7 | 25.8 | 8.5 | 11 | 17 | 17 | |
| 12 | G3/8'' | 1.5 | 10 | 26.8 | 9.5 | 12 | 19 | 20 | |
| 14 | G3/8'' | 1.5 | 10 | 37 | 11.25 | 12 | 24 | 24 | |
| 15 | G3/8'' | 1.5 | 12 | 37 | 11.25 | 16 | 25 | 27 | |
| 16 | G1/2'' | 1.5 | 13 | 37 | 11.25 | 16 | 26 | 27 | |
| 18 | G1/2'' | 1.5 | 13.2 | 37 | 11.25 | 16 | 28 | 27 | |
| 20 | G3/4'' | 2 | 16 | 38 | 12.25 | 17 | 31 | 30 | |
| 22 | G3/4'' | 2 | 18 | 38 | 12.25 | 17 | 33 | 32 | |
| 25 | G1'' | 2.5 | 20 | 39 | 13.25 | 19 | 36 | 41 | |
| 28 | G1'' | 2.5 | 23 | 39 | 13.25 | 19 | 40 | 41 | |
| 30 | G1 1/4'' | 2.5 | 25 | 58 | 14.5 | 22 | 47 | 46 | |
| 35 | G1 1/4'' | 2.5 | 30 | 59 | 15.5 | 22 | 52 | 50 | |
| 38 | G1 1/2'' | 3 | 32 | 59 | 15.5 | 22 | 55 | 54 | |
| 42 | G1 1/2'' | 3 | 31.7 | 59 | 15.5 | 22 | 61 | 53 | |
| 50 | G2'' | 4 | 44 | 63 | 18.5 | 24 | 70 | 65 | |
| 60 | G2'' | 4 | 48.3 | 64 | 19.5 | 24 | 81 | 72 | |
| 65 | G2 1/2'' | 5 | 54 | 64 | 19.5 | 24 | 86 | 76 | |

碳钢、不锈钢、混合型 / 公 制 （T型管接头，各端为管箍连接）
Carbon Steel , Stainless Steel , Combi / Millimeters (union Tee)

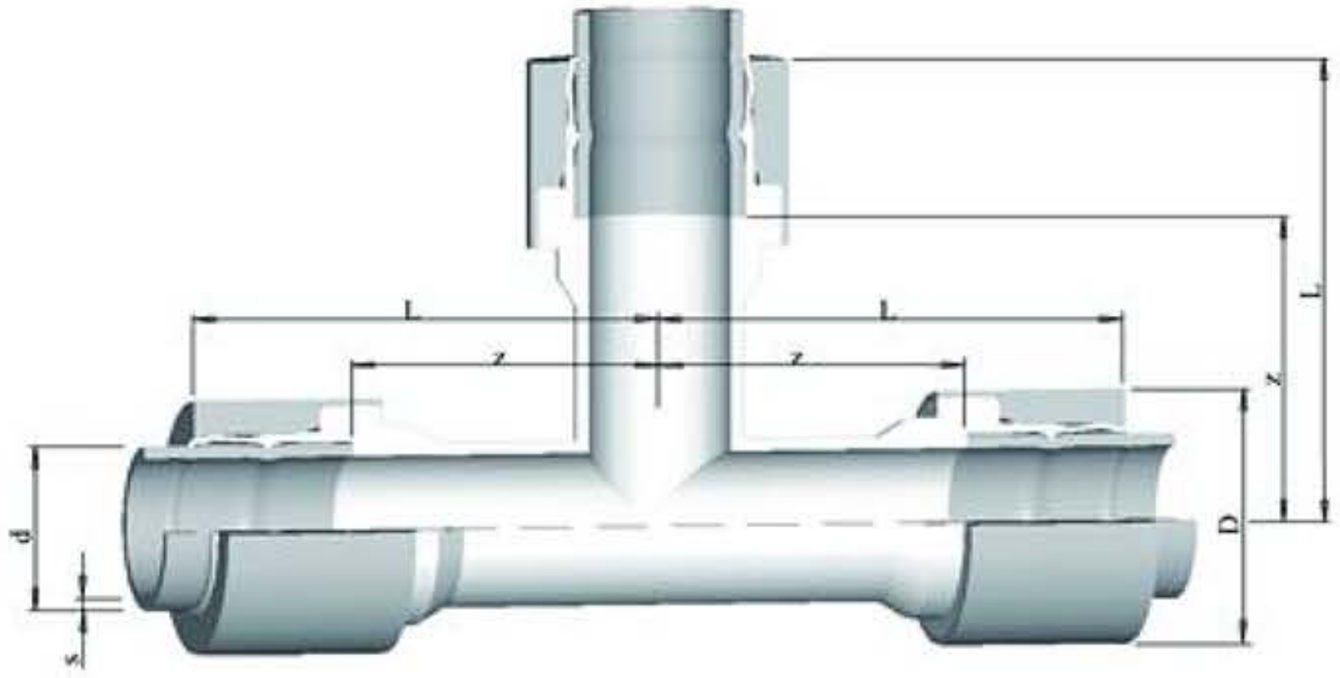


注意：如果管道的壁厚小于表格所列的壁厚 s = min，则需加用加固内垫，并独立预定制造。
Remark : Pipes having wall thickness less than s=min. , need a stiffening sleeve.This must be ordered separately.

| d = pipeΦ | s=min DIN | L | Z | D | kg |
|---|---|---|---|---|---|
| 18 | 1.5 | 53 | 33.75 | 28 | 0.32 |
| 20 | 2 | 54.5 | 35.25 | 31 | 0.38 |
| 22 | 2 | 55.5 | 36.25 | 33 | 0.41 |
| 25 | 2.5 | 57 | 37.75 | 36 | 0.50 |
| 28 | 2.5 | 59 | 39.75 | 40 | 0.57 |
| 30 | 2.5 | 86.5 | 53.75 | 47 | 1.40 |
| 35 | 2.5 | 89 | 56.25 | 52 | 1.59 |
| 42 | 3 | 93.5 | 60.75 | 61 | 2.08 |

**碳钢、不锈钢、混合型 / 公 制 （90度弯头，两端为管箍连接）**

Carbon Steel , Stainless Steel , Combi / Millimeters (quarter bend)

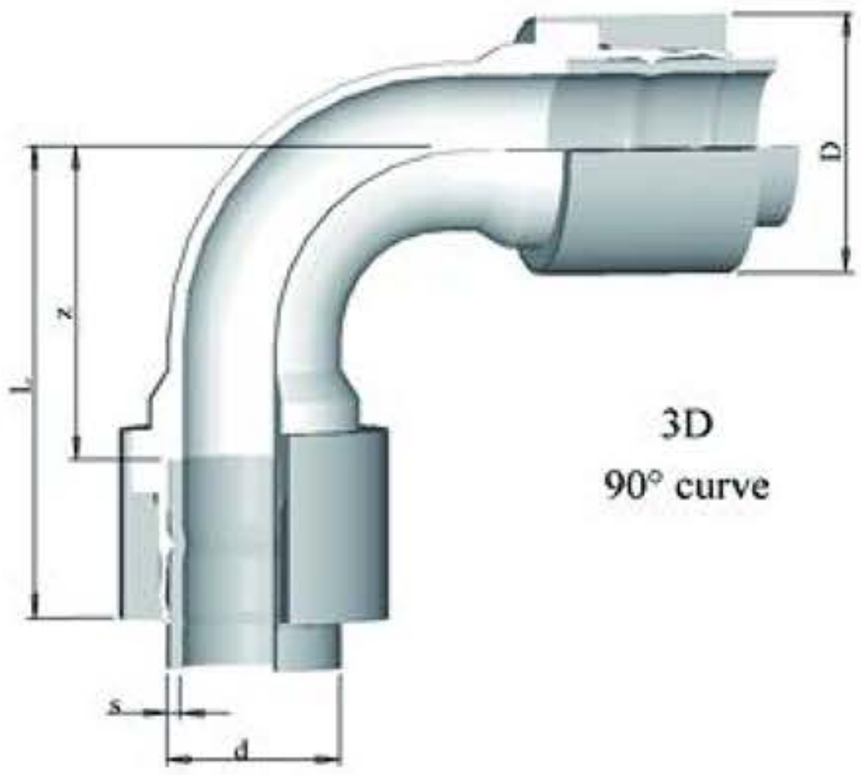


3D

90° curve

注意：如果管道的壁厚小于表格所列的壁厚 s = min，则需加用加固内垫，并独立预定制造。

Remark : Pipes having wall thickness less than s=min. , need a stiffening sleeve.This must be ordered separately.

| d = pipeΦ | s=min DIN | L | Z | D | kg |
|---|---|---|---|---|---|
| 18 | 1.5 | 53 | 33.75 | 28 | 0.20 |
| 20 | 2 | 54.5 | 35.25 | 31 | 0.23 |
| 22 | 2 | 55.5 | 36.25 | 33 | 0.25 |
| 25 | 2.5 | 57 | 37.75 | 36 | 0.30 |
| 28 | 2.5 | 59 | 39.75 | 40 | 0.35 |
| 30 | 2.5 | 86.5 | 53.75 | 47 | 0.86 |
| 35 | 2.5 | 89 | 56.25 | 52 | 0.98 |
| 42 | 3 | 93.5 | 60.75 | 61 | 1.25 |